BO125L

INSTALLATION SHEET

Reference: BO125L0...

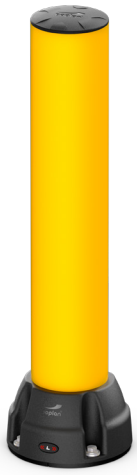

4x Concrete screw
(ø12,5x100mm)

4x Flanged spacer
Ø16xØ22xØ32mm

Included:

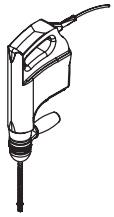

Electric drill

Ø 10 mm

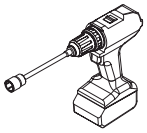

Impact Wrench
>500 Nm
+ Extension part
+ Socket SW15

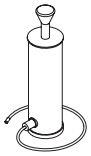

Dust remover (Air)

Required Tools

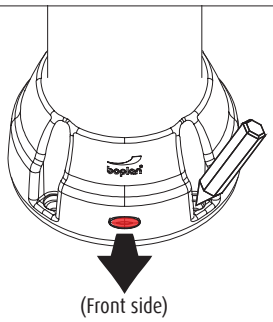

1 Position and mark location of all 4 holes

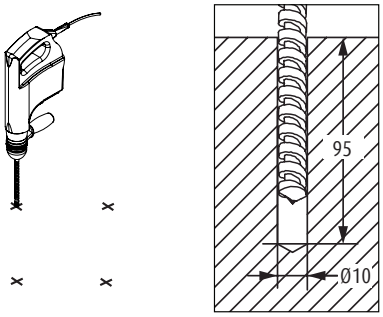

2 Move product to side and drill all holes (Ø10 x 95mm)

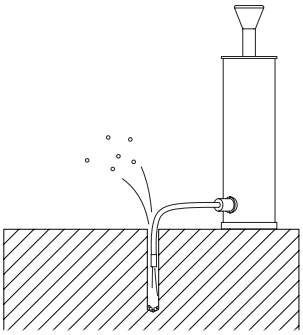

3 Remove debris from holes

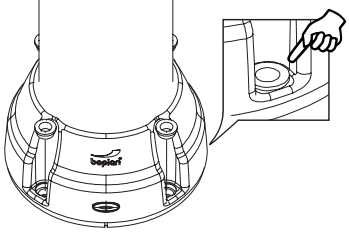

4 Insert the flanged spacers flush into the holes of the flexible base

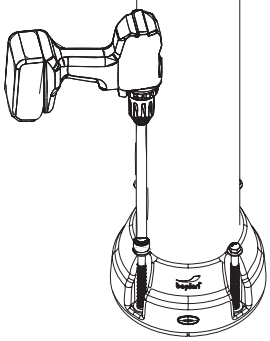

5 Insert screws

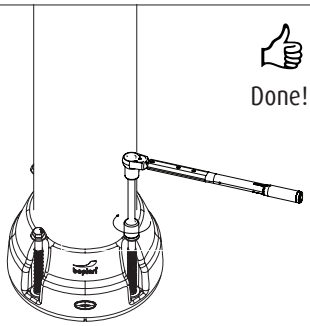

6 Tighten screws with wrench;
Torque = 80 Nm

boplan® READY FOR IMPACT

For more information, please visit **www.boplan.com**

Rev: 4 December 2023 4:30 pm