WALLY PRO

INSTALLATION SHEET

Reference: WA0160-0160-0070RE

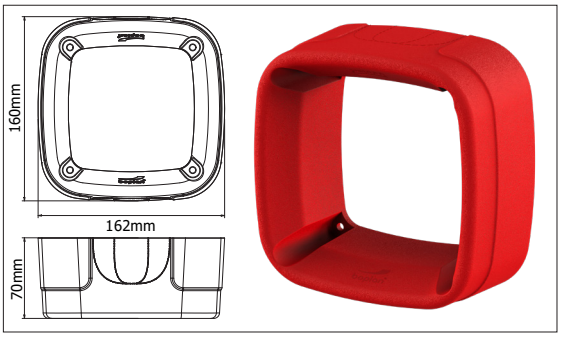

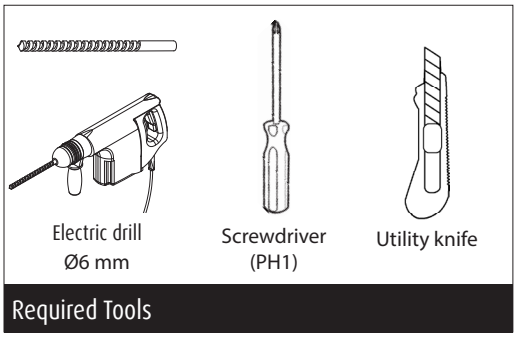

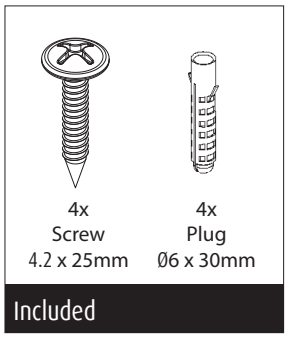

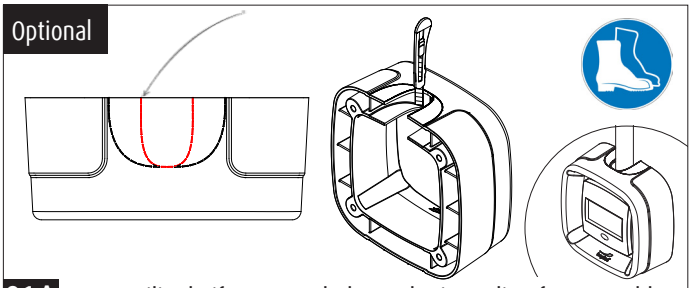

01A Use a utility knife to cut a hole on the inner line for one cable

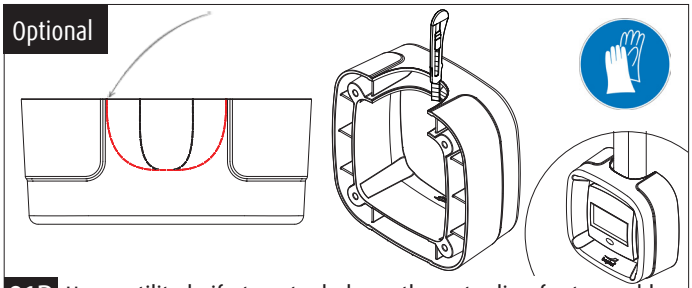

01B Use a utility knife to cut a hole on the outer line for two cables

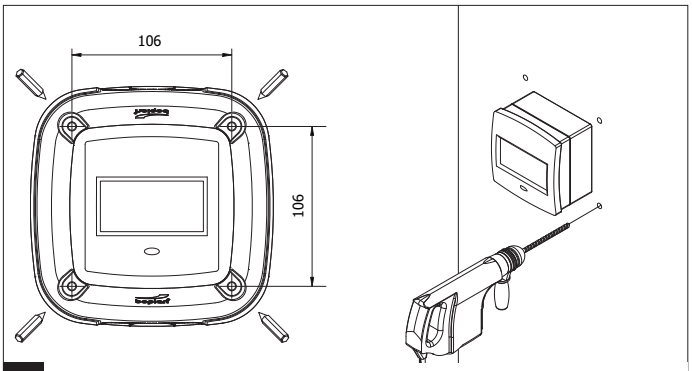

02 Mark position & Drill holes Ø6mm x 40mm deep

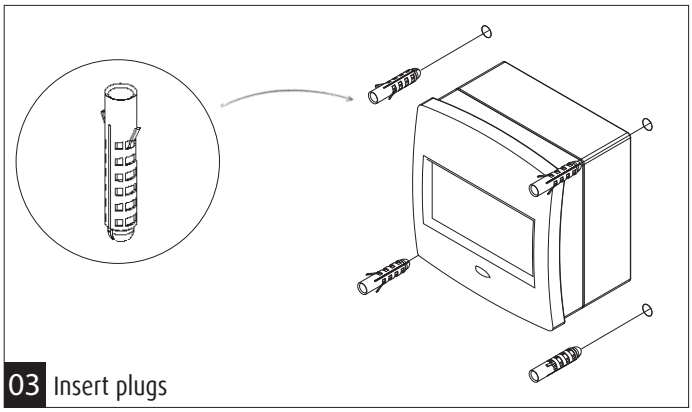

03 Insert plugs

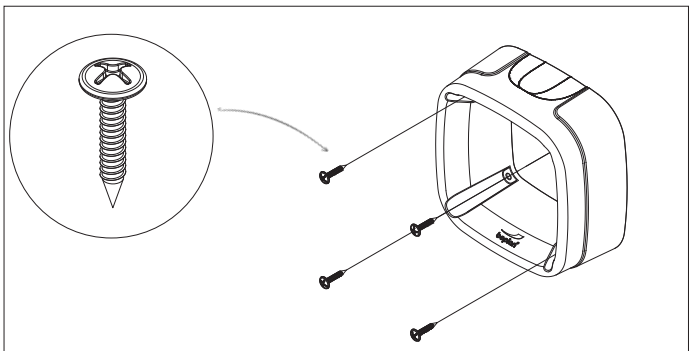

04 Place Wally Pro over plugs and attach screws until seated

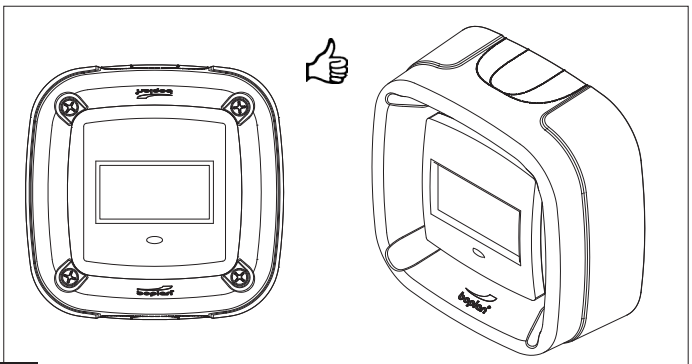

05 DONE!

boplan® READY FOR IMPACT

For more information, please visit **www.boplan.com**

Rev: 25 November 2024 4:05 pm