BO250T

INSTALLATION SHEET

Reference: BO250T-...

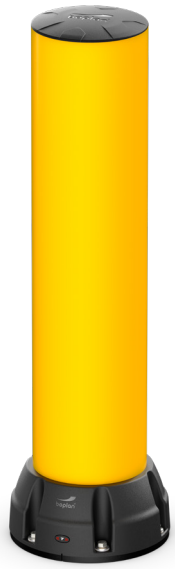

6x Concrete screw (ø17x130mm)

1x Concrete screw (ø14,9x130mm)

6x Flanged spacer Ø19xØ27xØ32mm

Included:

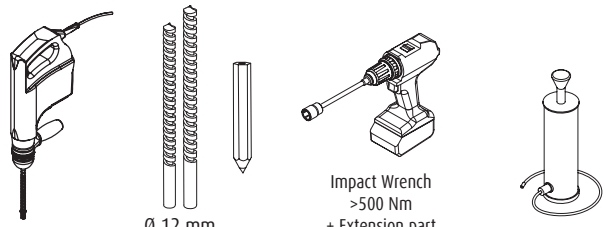

Electric drill

Ø 12 mm
Ø 14 mm

Impact Wrench
>500 Nm
+ Extension part
+ Socket SW21
+ Socket SW17

Dust remover (Air)

Required Tools

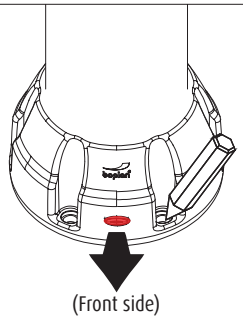

1 Position and mark location of the 6 outer holes.

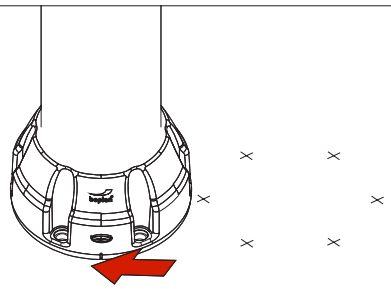

2 Move product away

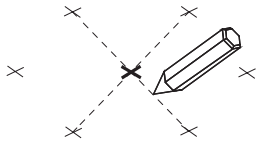

3 Mark the location of the center hole by drawing 2 intersecting lines connecting 2 sets of holes

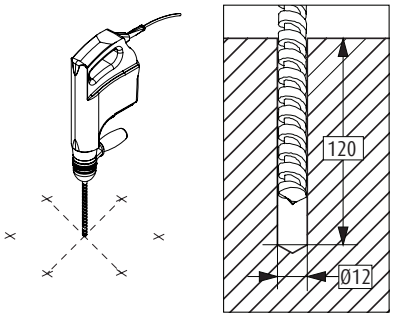

4 Drill the center hole (only) Ø12x120 mm

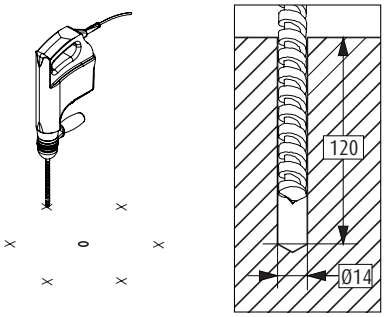

5 Drill the 6 outer holes Ø14 (!) x 120 mm.

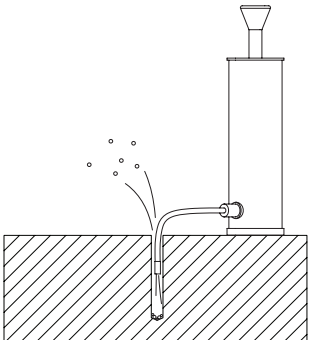

6 Remove debris from holes.

boplan® READY FOR IMPACT

For more information, please visit **www.boplan.com**

Rev: 14 August 2024 10:55 am

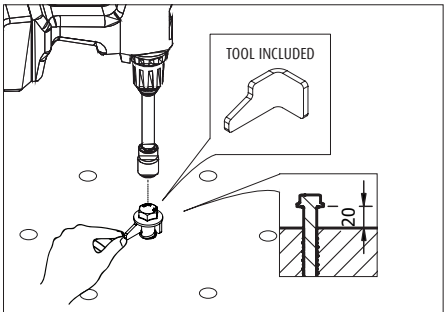

7 Insert center screw (Ø14,9x130 mm). Use included spacing tool to leave 20 mm space between head and ground.

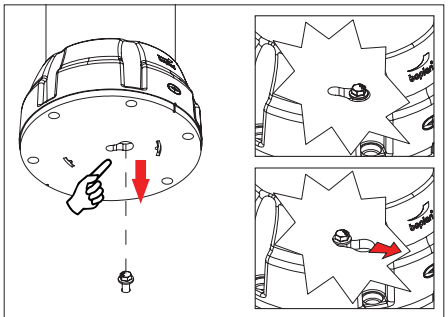

8 Fixate bollard on the center fixation. Slide the bollard securely into the fixation as shown.

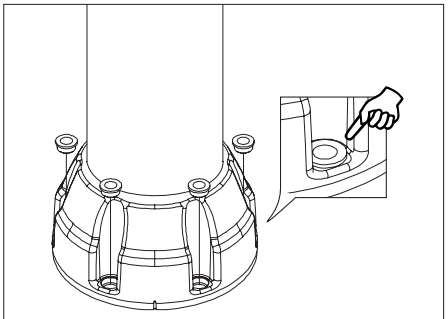

9 Insert the flanged spacers flush into the holes of the flexible base

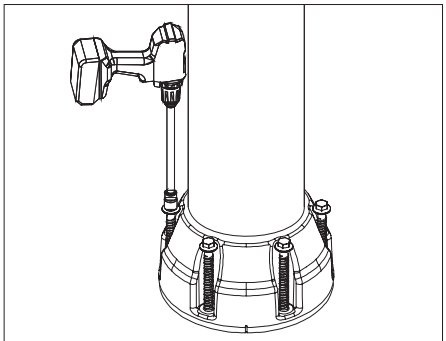

10 Insert the 6 outer screws ø17x135 mm.

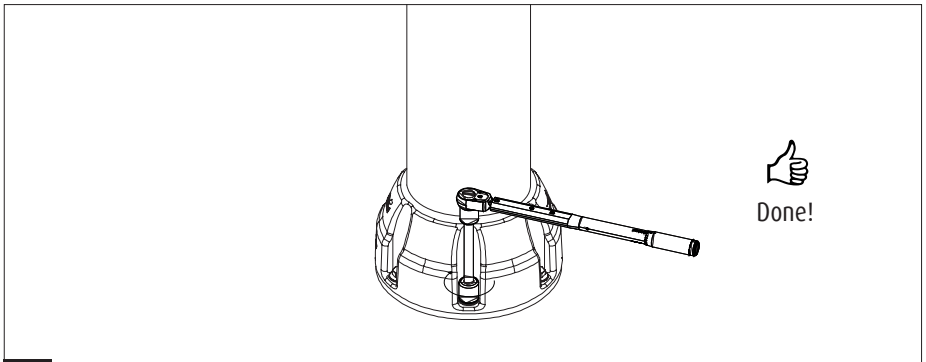

11 Tighten screws with wrench. Torque = 100 Nm.