BO170B

INSTALLATION SHEET

Reference: BO170B0-...

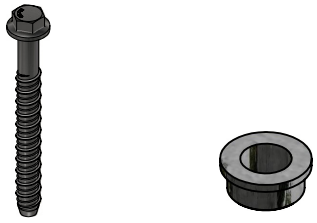

4x Concrete screw
(ø14,9x130mm)

4x Flanged spacer
Ø16xØ22xØ27mm

Included:

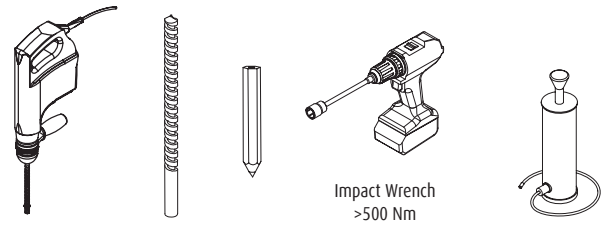

Electric drill

Ø 12 mm

Impact Wrench
>500 Nm
+ Extension part
+ Socket SW17

Dust remover (Air)

Required Tools

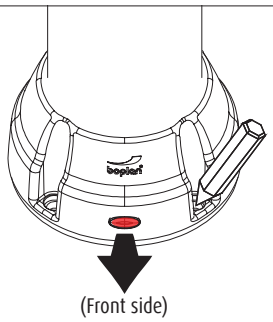

1 Position and mark location of all 4 holes

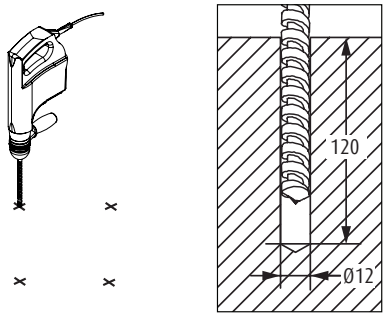

2 Move product to side and drill all holes (Ø12 x 120mm)

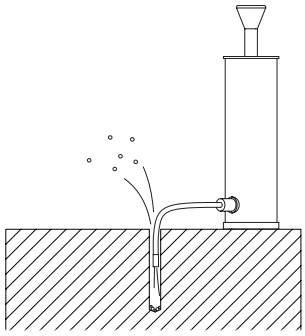

3 Remove debris from holes

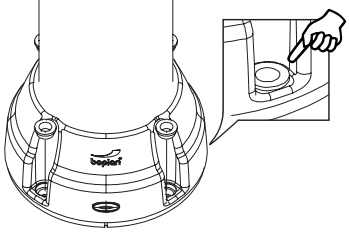

4 Insert the flanged spacers flush into the holes of the flexible base

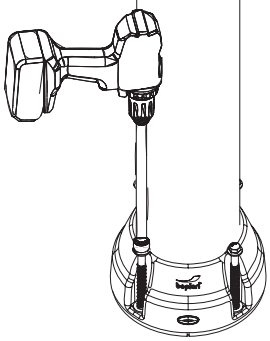

5 Insert screws

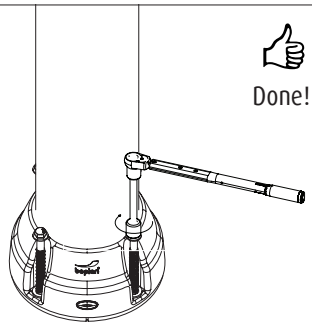

6 Tighten screws with wrench;
Torque = 90 Nm

boplan® READY FOR IMPACT

For more information, please visit **www.boplan.com**

Rev: 3 January 2024 4:18 pm