SIGN MARK 200

INSTALLATION SHEET

Reference: SS0001-0200-...

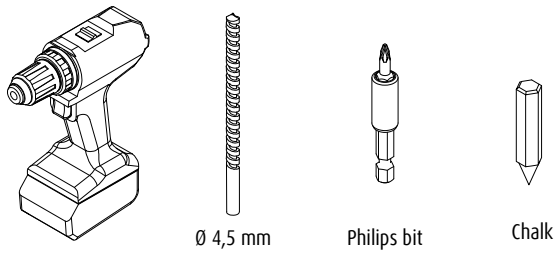

Required Tools

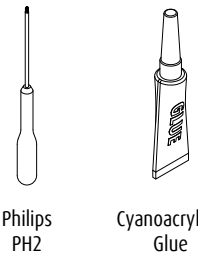

Optional tools

Available stickers

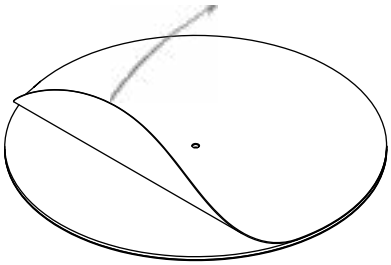

1 Remove protective film of plastic plate

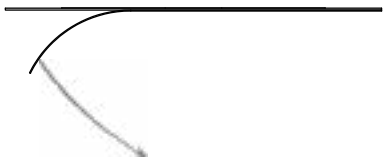

2 Remove 1/3 of sticker liner

3 Fold removed liner

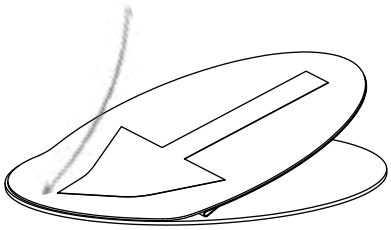

4 Position sticker and start applying

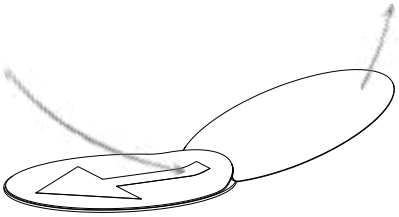

5 Continue applying whilst removing liner

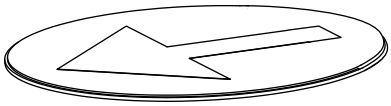

boplan® READY FOR IMPACT

For more information, please visit **www.boplan.com**

Rev: 30 January 2026 9:14 am

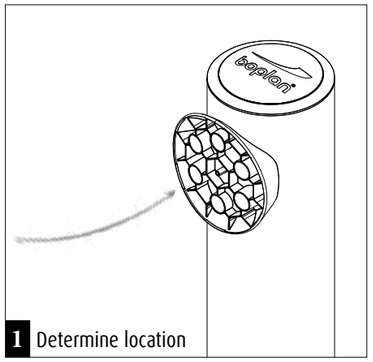

1 Determine location

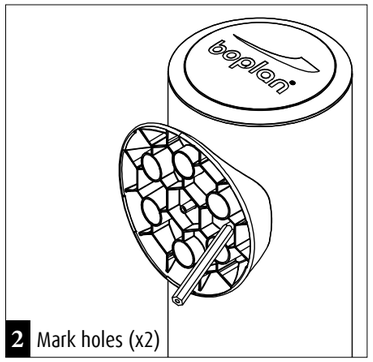

2 Mark holes (x2)

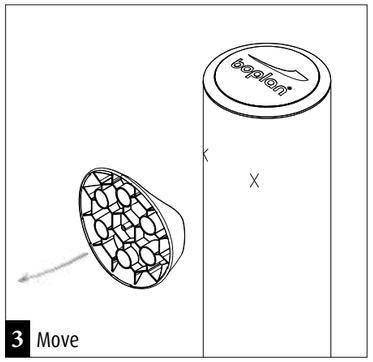

3 Move

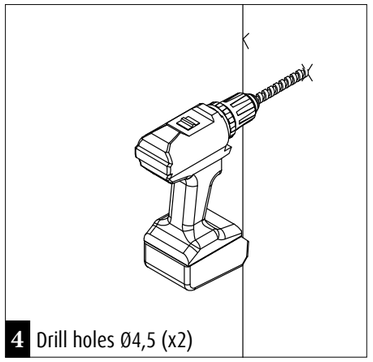

4 Drill holes Ø4,5 (x2)

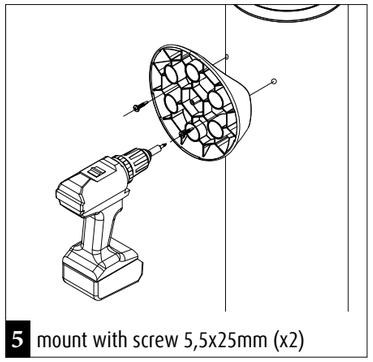

5 mount with screw 5,5x25mm (x2)

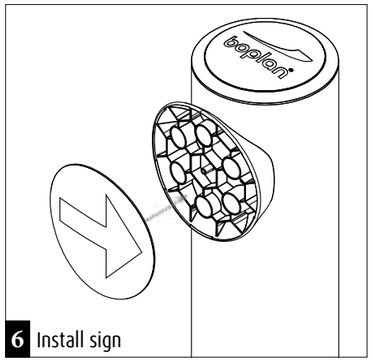

6 Install sign

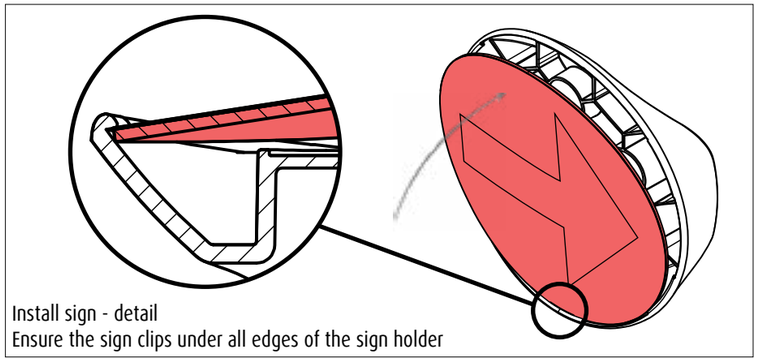

Install sign - detail
Ensure the sign clips under all edges of the sign holder

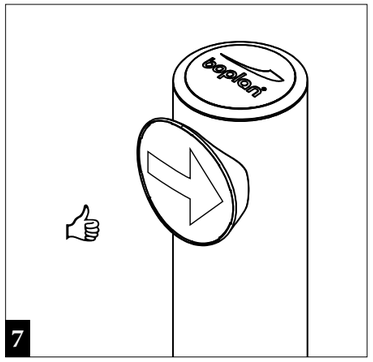

7

Optional Sign Board Screw fixation

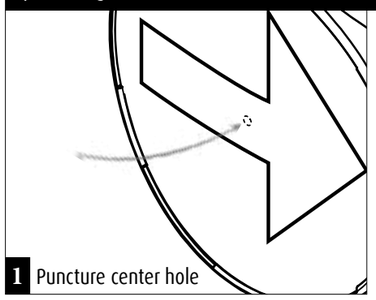

1 Puncture center hole

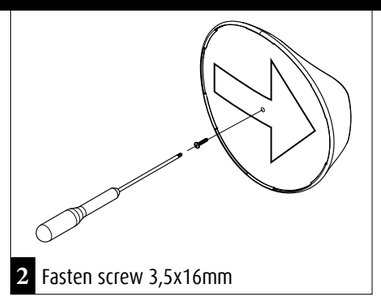

2 Fasten screw 3,5x16mm

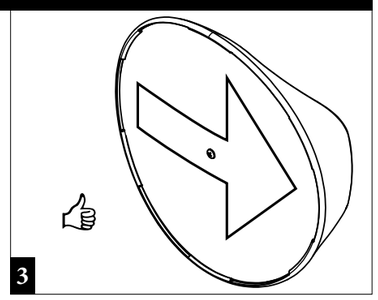

3

Optional permanent glue fixation

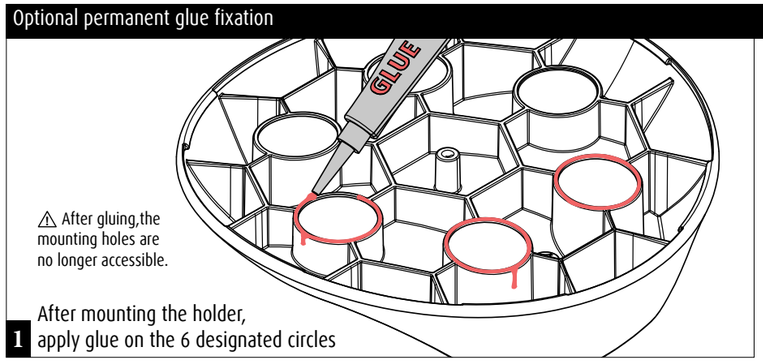

⚠ After gluing,the mounting holes are no longer accessible.

1 After mounting the holder, apply glue on the 6 designated circles

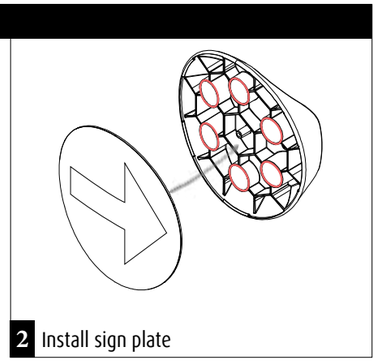

2 Install sign plate

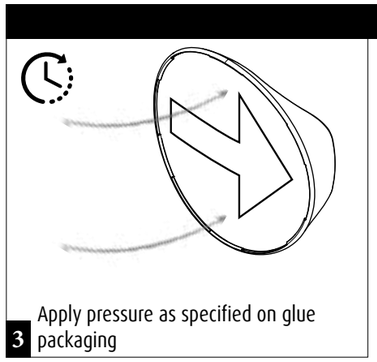

3 Apply pressure as specified on glue packaging

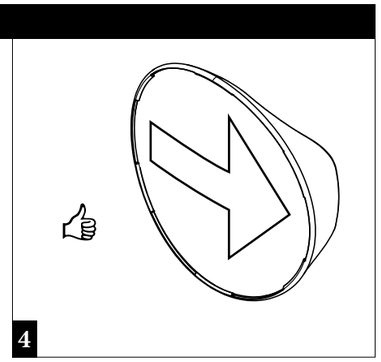

4